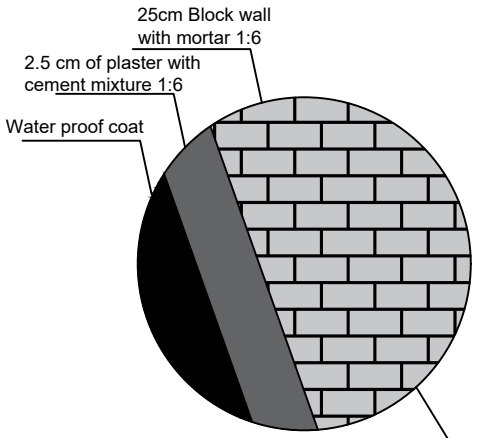

Latrine layout

Any missing Details or information just inform construction department

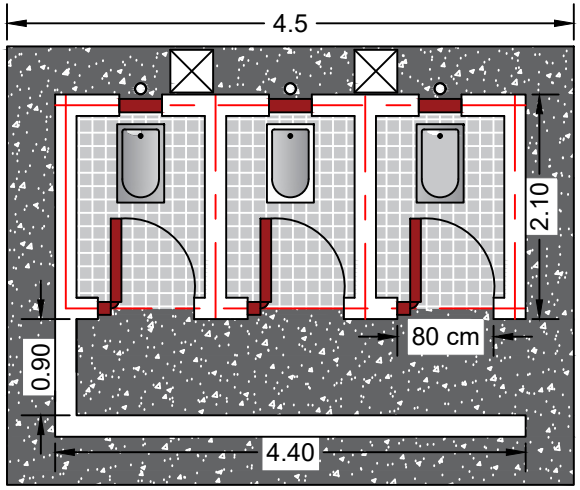

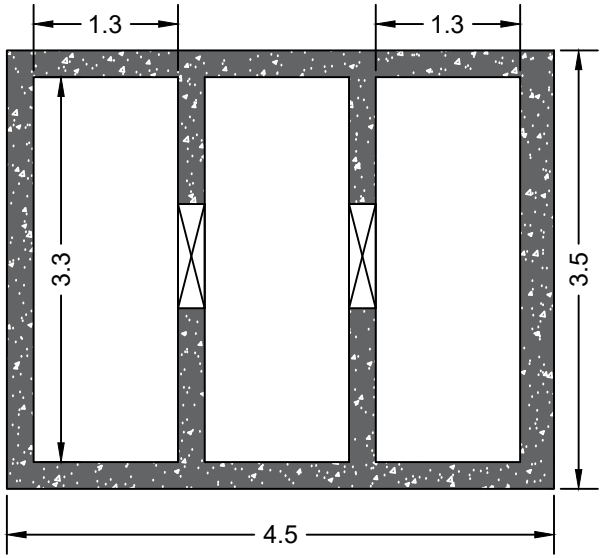

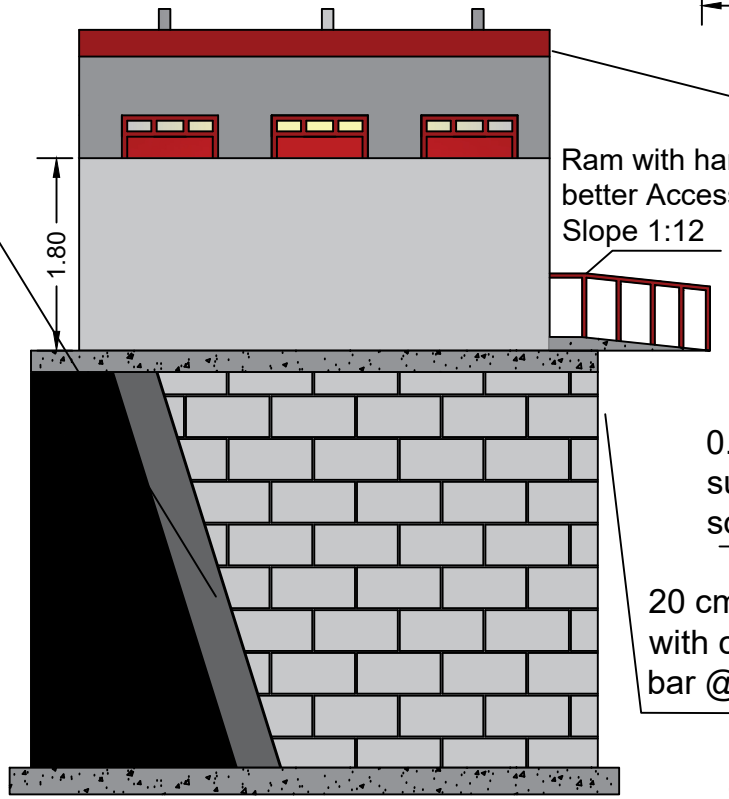

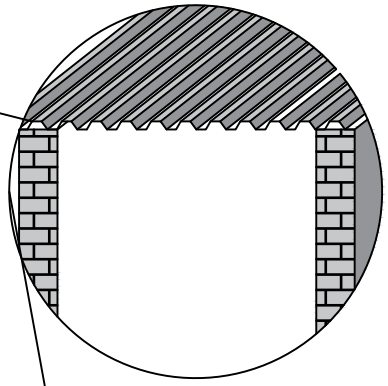

0.41 zinc sheets supported with square pipe 4*8 mm

20 cm Reinforcement Concrete base with cement mixture 4:2:1,with 12mm bar @150 c/c BW

10 cm of light concrete with cement mixture 1:3:7

Save the Children